ACER_SJM31

USB BOARD

2009.5.4

Monday, May 04, 2009	2009-ECO-006989	B
DATE	CHANGE NO.	REV

	EE	DATE	POWER	DATE
DRAWER				
DESIGN				
CHECK				
RESPONSIBLE				

SIZE= VER:

FILE NAME: XXXX-XXXXXX-XX

P/N XXXXXXXXXXX

INVENTEC

TITLE ACER_SJM31_USB Board

SIZE	CODE	DOC.NUMBER	REV
C	CS	D-CS-1310A22890-0-ALG	B

SHEET 1 of 15

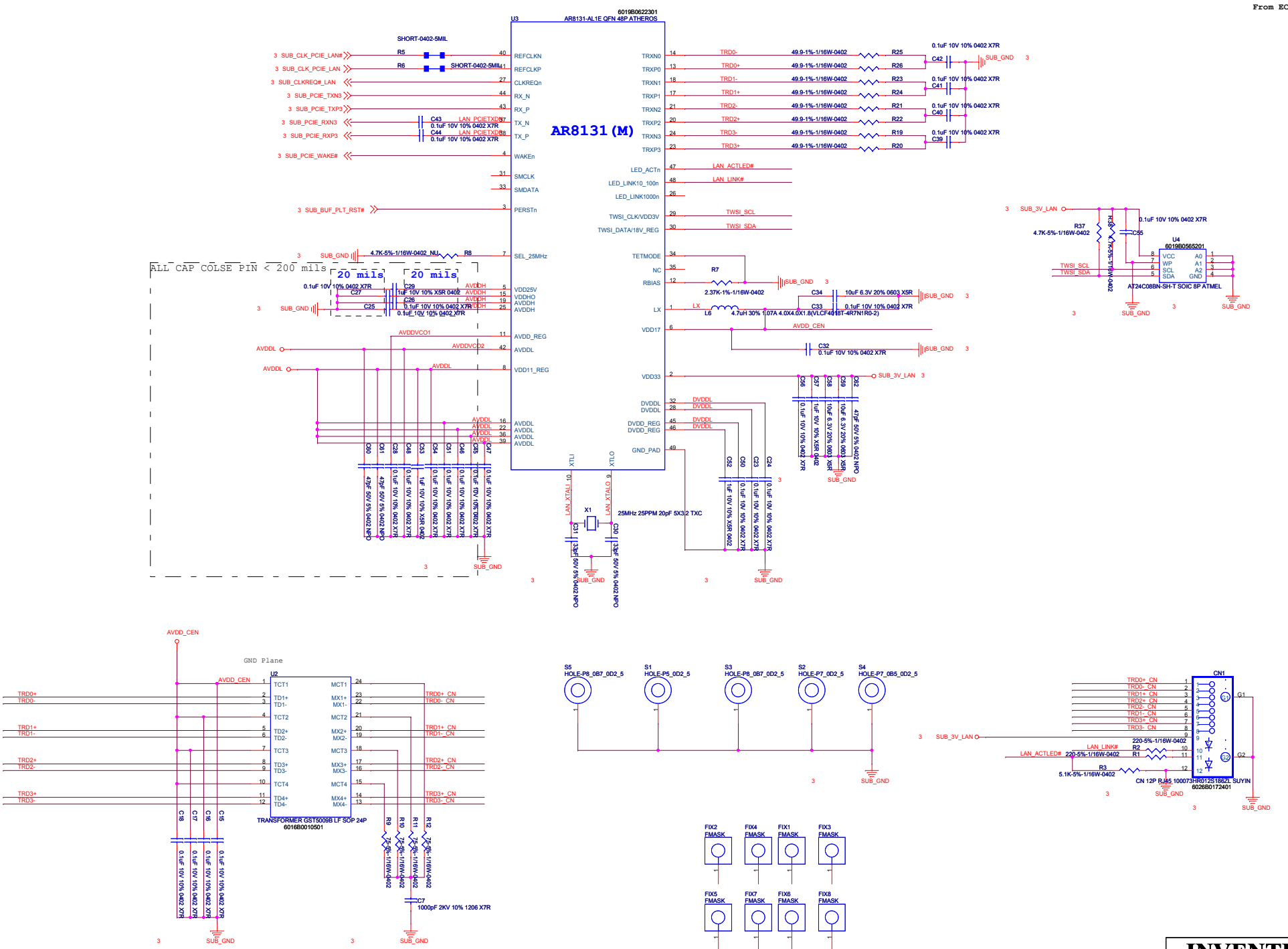

INVENTEC					
TITLE	JM31_MS_USB Board LAN (AR8131)				
SIZE	CODE	DOC.NUMBER		REV	
Custom	X01	D-CS-1310A2271201-ALG		X01	
CHANGE by	<CHANGE by>	DATE	Tuesday, April 28, 2009	SHEET	2 of 15

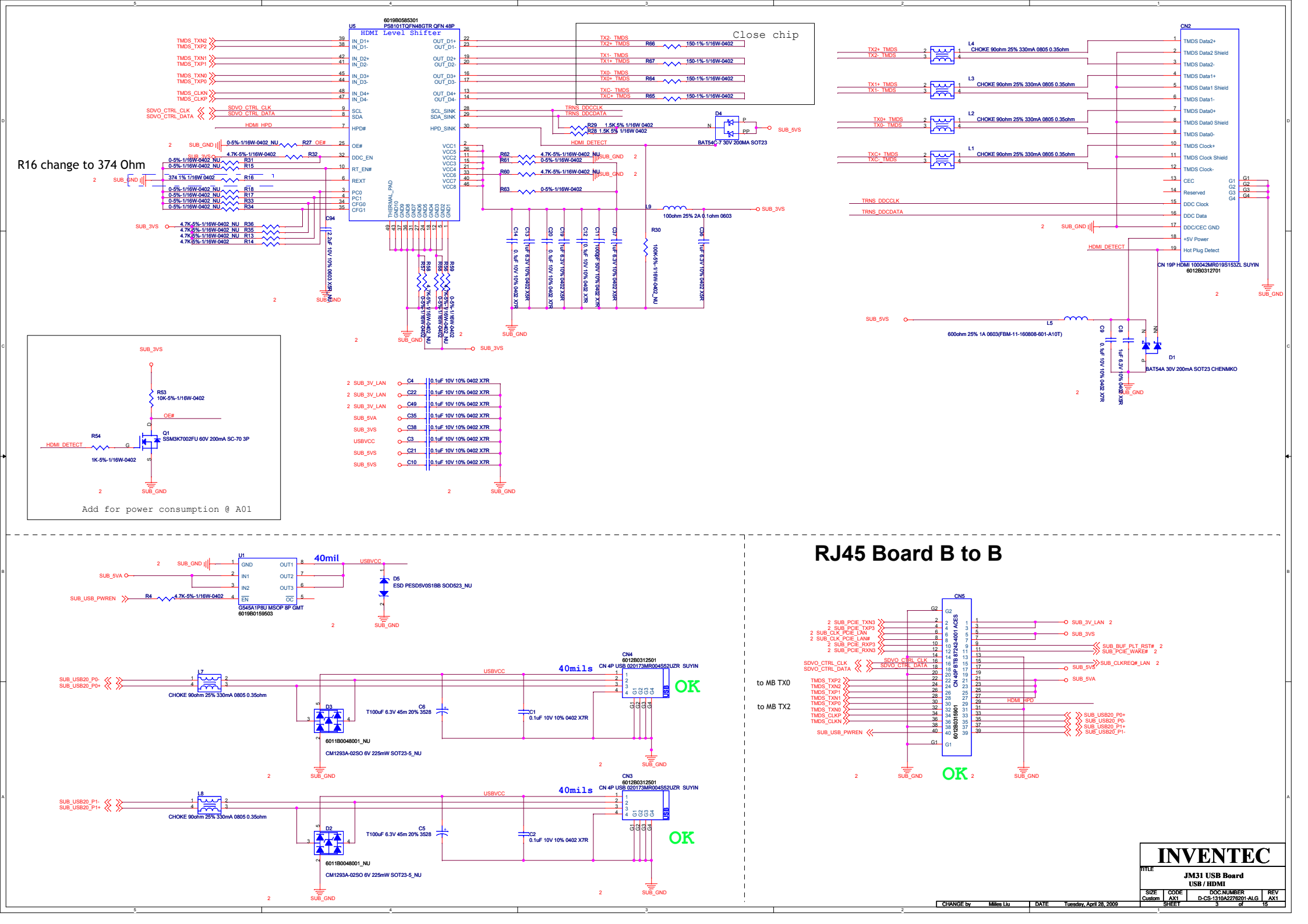
U5
6019B0585301
PS8101TQFN48GTR QFN 48P
HDMI Level Shifter
Close chip
R16 change to 374 Ohm
CN2
CN 19P HDMI 100042MR019S153ZL SUYIN
6012B0312701
Add for power consumption @ A01
RJ45 Board B to B
CN5
CN4
CN3
OK
OK
INVENTEC
JM31 USB Board
USB / HDMI
D-CS-1310A2276201-ALG
Tuesday, April 28, 2009
Miles Liu

ACER_SJM31

Audio BOARD

2009.5.4

Monday, May 04, 2009		B
DATE	CHANGE NO.	REV

	EE	DATE	POWER	DATE
DRAWER				
DESIGN				
CHECK				
RESPONSIBLE				

SIZE= VER:

FILE NAME: XXXX-XXXXXX-XX

P/N XXXXXXXXXXXX

INVENTEC

TITLE ACER_SJM31_Audio Board

SIZE	CODE	DOC NUMBER	REV
C	CS	D-CS-1310A2276001-ALG	B

SHEET 4 of 15

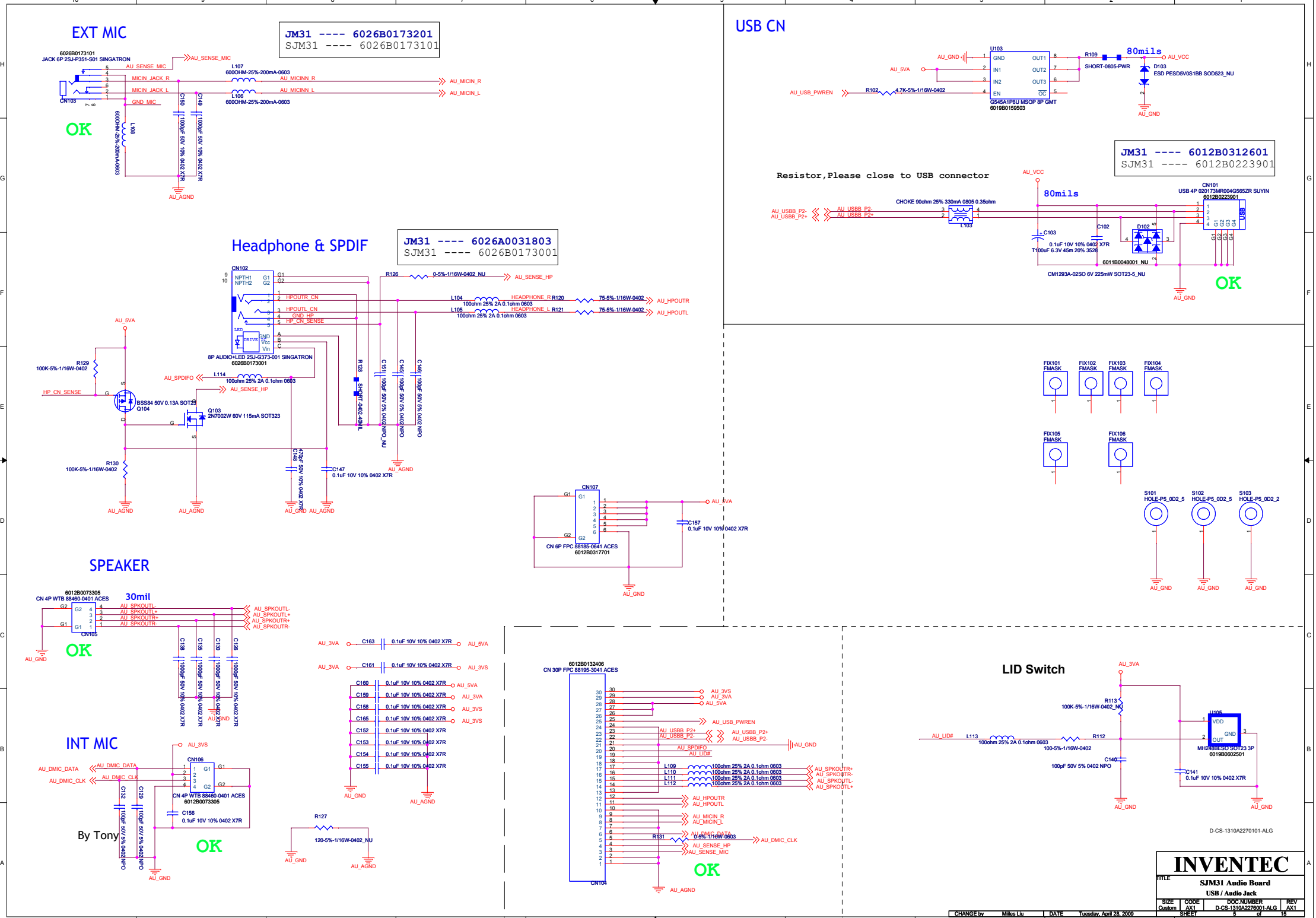
EXT MIC
JM31 ---- 6026B0173201
SJM31 ---- 6026B0173101
6026B0173101
JACK 6P 2SJ-P351-S01 SINGATRON
CN103
AU_SENSE_MIC
MICIN_JACK_R
MICIN_JACK_L
GND_MIC
L107
600OHM-25%-200mA-0603
L106
600OHM-25%-200mA-0603
AU_MICINN_R
AU_MICINN_L
AU_MICIN_R
AU_MICIN_L
C150
C149
1000pF 50V 10% 0402 X7R
L108
600OHM-25%-200mA-0603
AU_AGND
OK
USB CN
U103
G545A1P8U MSOP 8P GMT
6019B0159503
AU_GND
AU_5VA
AU_USB_PWREN
R102
4.7K-5%-1/16W-0402
R109
SHORT-0805-PWR
80mils
AU_VCC
D103
ESD PESD5V0S1BB SOD523_NU
JM31 ---- 6012B0312601
SJM31 ---- 6012B0223901
Resistor,Please close to USB connector
AU_VCC
80mils
CN101
USB 4P 020173MR004G565ZR SUYIN
6012B0223901
AU_USBB_P2-
AU_USBB_P2+
CHOKE 90ohm 25% 330mA 0805 0.35ohm
L103
C103
0.1uF 10V 10% 0402 X7R
T100uF 6.3V 45m 20% 3528
C102
D102
6011B0048001_NU
CM1293A-02SO 6V 225mW SOT23-5_NU
OK
Headphone & SPDIF
JM31 ---- 6026A0031803
SJM31 ---- 6026B0173001
CN102
8P AUDIO+LED 2SJ-G373-001 SINGATRON
6026B0173001
HPOUTR_CN
HPOUTL_CN
GND_HP
HP_CN_SENSE
R126
0-5%-1/16W-0402_NU
AU_SENSE_HP
L104
100ohm 25% 2A 0.1ohm 0603
L105
100ohm 25% 2A 0.1ohm 0603
HEADPHONE_R
HEADPHONE_L
R120
R121
75-5%-1/16W-0402
AU_HPOUTR
AU_HPOUTL
AU_5VA
R129
100K-5%-1/16W-0402
HP_CN_SENSE
BSS84 50V 0.13A SOT23
Q104
Q103
2N7002W 60V 115mA SOT323
AU_SPDIFO
L114
100ohm 25% 2A 0.1ohm 0603
AU_SENSE_HP
R130
100K-5%-1/16W-0402
R128
SHORT-0402-40MIL
C151
C145
C146
1000pF 50V 5% 0402 NPO
C149
470pF 50V 10% 0402 X7R
C147
0.1uF 10V 10% 0402 X7R
AU_AGND
CN107
CN 6P FPC 88185-0641 ACES
6012B0317701
C157
0.1uF 10V 10% 0402 X7R
FIX101 FMASK
FIX102 FMASK
FIX103 FMASK
FIX104 FMASK
FIX105 FMASK
FIX106 FMASK
S101 HOLE-P5_0D2_5
S102 HOLE-P5_0D2_5
S103 HOLE-P5_0D2_2
SPEAKER
6012B0073305
CN 4P WTB 88460-0401 ACES
CN105
30mil
AU_SPKOUTL-
AU_SPKOUTL+
AU_SPKOUTR+
AU_SPKOUTR-
C138
C135
C130
C126
1000pF 50V 10% 0402 X7R
OK
AU_3VA
C163
0.1uF 10V 10% 0402 X7R
AU_5VA
AU_3VA
C161
0.1uF 10V 10% 0402 X7R
AU_3VS
C160
C159
C158
C165
C152
C153
C154
C155
0.1uF 10V 10% 0402 X7R
AU_5VA
AU_3VA
AU_3VS
AU_3VS
INT MIC
AU_3VS
CN106
CN 4P WTB 88460-0401 ACES
6012B0073305
AU_DMIC_DATA
AU_DMIC_CLK
C132
C129
1000pF 50V 5% 0402 NPO
C156
0.1uF 10V 10% 0402 X7R
By Tony
OK
R127
120-5%-1/16W-0402_NU
6012B0132406
CN 30P FPC 88195-3041 ACES
CN104
AU_USB_PWREN
AU_USBB_P2+
AU_USBB_P2-
AU_SPDIFO
AU_LID#
L109
L110
L111
L112
100ohm 25% 2A 0.1ohm 0603
AU_SPKOUTR+
AU_SPKOUTR-
AU_SPKOUTL-
AU_SPKOUTL+
AU_HPOUTR
AU_HPOUTL
AU_MICIN_R
AU_MICIN_L
AU_DMIC_DATA
R131
0-5%-1/16W-0603
AU_DMIC_CLK
AU_SENSE_HP
AU_SENSE_MIC
OK
LID Switch
AU_3VA
R113
100K-5%-1/16W-0402_NU
AU_LID#
L113
100ohm 25% 2A 0.1ohm 0603
R112
100-5%-1/16W-0402
C140
100pF 50V 5% 0402 NPO
U105
MH248BESO SOT23 3P
6019B0602501
C141
0.1uF 10V 10% 0402 X7R
D-CS-1310A2270101-ALG
INVENTEC
TITLE
SJM31 Audio Board
USB / Audio Jack
SIZE Custom
CODE AX1
DOC.NUMBER D-CS-1310A2270001-ALG
REV AX1
SHEET 5 of 15
CHANGE by Miles Liu
DATE Tuesday, April 28, 2009

ACER_SJM31

VGA BOARD

2009.5.4

Monday, May 04, 2009	2009-ECO-006989	B
DATE	CHANGE NO.	REV

	EE	DATE	POWER	DATE
DRAWER				
DESIGN				
CHECK				
RESPONSIBLE				

SIZE= VER:

FILE NAME: XXXX-XXXXXX-XX

P/N XXXXXXXXXXX

INVENTEC

TITLE ACER_SJM31_VGA Board

SIZE	CODE	DOC NUMBER	REV
C	CS	D-CS-1310A22759-0-ALG	B

SHEET 6 of 15

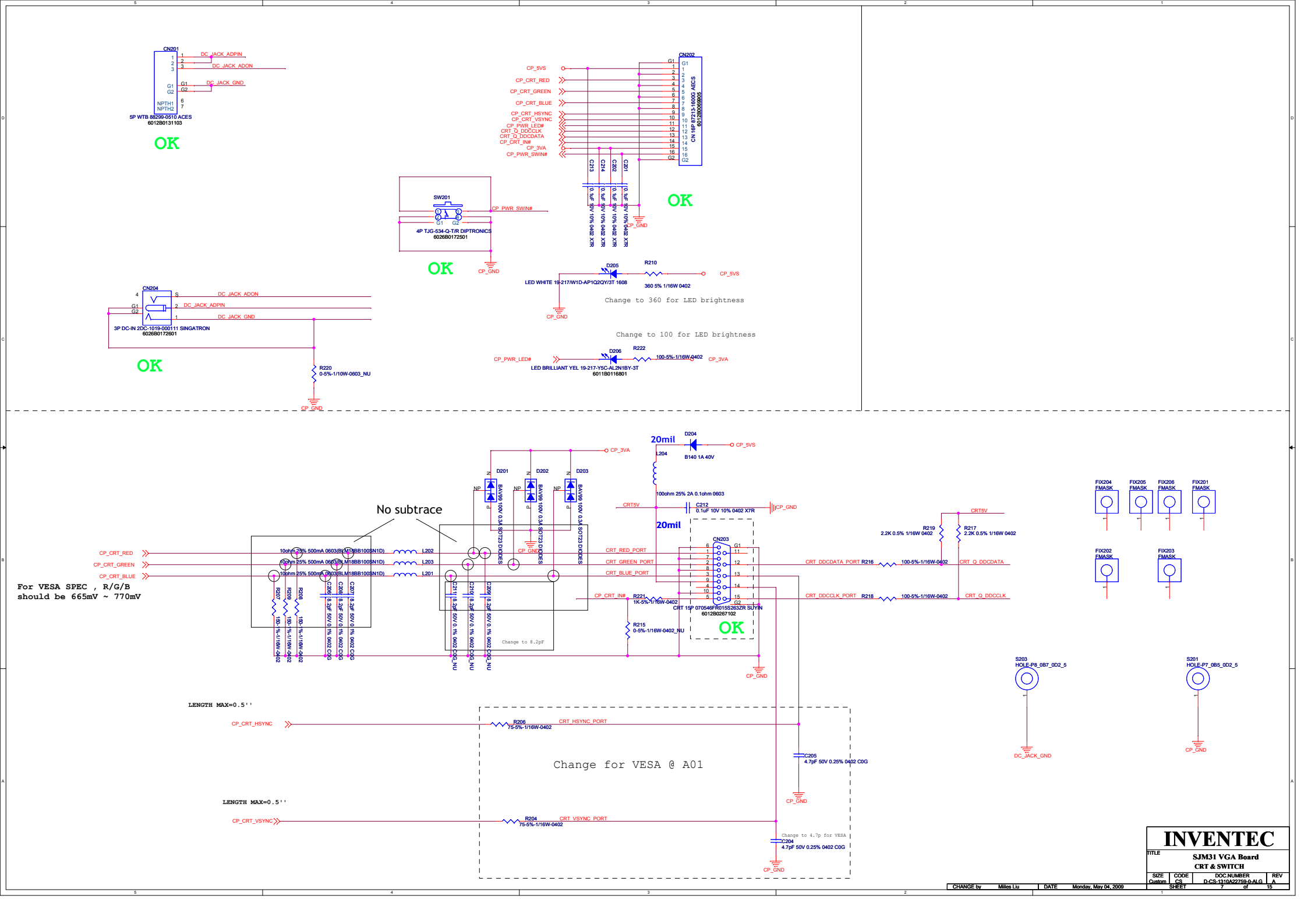
CN201
DC_JACK_ADPIN
DC_JACK_ADON
DC_JACK_GND
5P WTB 88299-0510 ACES
6012B0131103
OK
CN202
CN 16P 87213-1600G ACES
6012B0069905
CP_5VS
CP_CRT_RED
CP_CRT_GREEN
CP_CRT_BLUE
CP_CRT_HSYNC
CP_CRT_VSYNC
CP_PWR_LED#
CRT_Q_DDCCLK
CRT_Q_DDCDATA
CP_CRT_IN#
CP_3VA
CP_PWR_SWIN#
C213 0.1uF 10V 10% 0402 X7R
C214 0.1uF 10V 10% 0402 X7R
C202 0.1uF 10V 10% 0402 X7R
C201 0.1uF 10V 10% 0402 X7R
CP_GND
OK
SW201
4P TJG-534-Q-T/R DIPTRONICS
6026B0172501
CP_PWR_SWIN#
CP_GND
OK
D205
LED WHITE 19-217/W1D-AP1Q2QY/3T 1608
R210
360 5% 1/16W 0402
CP_5VS
Change to 360 for LED brightness
Change to 100 for LED brightness
D206
LED BRILLIANT YEL 19-217-Y5C-AL2N1BY-3T
6011B0116801
R222
100-5%-1/16W-0402
CP_PWR_LED#
CP_3VA
CN204
3P DC-IN 2DC-1019-000111 SINGATRON
6026B0172601
DC_JACK_ADON
DC_JACK_ADPIN
DC_JACK_GND
OK
R220
0-5%-1/16W-0603_NU
CP_GND
20mil
D204
B140 1A 40V
CP_5VS
L204
100ohm 25% 2A 0.1ohm 0603
CP_3VA
D201
D202
D203
BAV99 100V 0.3A SOT23 DIODES
No subtrace
CRT5V
C212
0.1uF 10V 10% 0402 X7R
CP_GND
20mil
CP_CRT_RED
CP_CRT_GREEN
CP_CRT_BLUE
10ohm 25% 500mA 0603(BLM18BB100SN1D)
L202
L203
L201
CRT_RED_PORT
CRT_GREEN_PORT
CRT_BLUE_PORT
CP_CRT_IN#
R221
1K-5%-1/16W-0402
R215
0-5%-1/16W-0402_NU
CN203
CRT 15P 070546FR015S263ZR SUYIN
6012B0267102
OK
CRT_DDCDATA_PORT
R216
100-5%-1/16W-0402
CRT_DDCCLK_PORT
R218
100-5%-1/16W-0402
R219
2.2K 0.5% 1/16W 0402
R217
2.2K 0.5% 1/16W 0402
CRT_Q_DDCDATA
CRT_Q_DDCCLK
FIX204 FMASK
FIX205 FMASK
FIX206 FMASK
FIX201 FMASK
FIX202 FMASK
FIX203 FMASK
For VESA SPEC , R/G/B
should be 665mV ~ 770mV
R207 150-1%-1/16W-0402
R209 150-1%-1/16W-0402
R208 150-1%-1/16W-0402
C208 8.2pF 50V 0.1% 0402 C0G
C209 8.2pF 50V 0.1% 0402 C0G
C207 8.2pF 50V 0.1% 0402 C0G
C211 8.2pF 50V 0.1% 0402 C0G_NU
C210 8.2pF 50V 0.1% 0402 C0G_NU
C206 8.2pF 50V 0.1% 0402 C0G_NU
Change to 8.2pF
S203
HOLE-P8_0B7_0D2_5
DC_JACK_GND
S201
HOLE-P7_0B5_0D2_5
CP_GND
LENGTH MAX=0.5''
CP_CRT_HSYNC
R206
75-5%-1/16W-0402
CRT_HSYNC_PORT
Change for VESA @ A01
C205
4.7pF 50V 0.25% 0402 C0G
LENGTH MAX=0.5''
CP_CRT_VSYNC
R204
75-5%-1/16W-0402
CRT_VSYNC_PORT
Change to 4.7p for VESA
C204
4.7pF 50V 0.25% 0402 C0G
INVENTEC
TITLE
SJM31 VGA Board
CRT & SWITCH
SIZE Custom
CODE CS
DOC.NUMBER D-CS-1310A2759-0-ALG
REV A
CHANGE by Miles Liu
DATE Monday, May 04, 2009
SHEET 7 of 15

ACER_SJM31

CardReader BOARD

2009.5.4

Monday, May 04, 2009		B
DATE	CHANGE NO.	REV

	EE	DATE	POWER	DATE
DRAWER				
DESIGN				
CHECK				
RESPONSIBLE				

SIZE= VER:

FILE NAME: XXXX-XXXXXX-XX

P/N XXXXXXXXXXX

INVENTEC

TITLE ACER_SJM31_Cardreader Board

SIZE	CODE	DOC NUMBER	REV
C	CS	D-CS-1310A2270301-ALG	B

SHEET 8 of 15

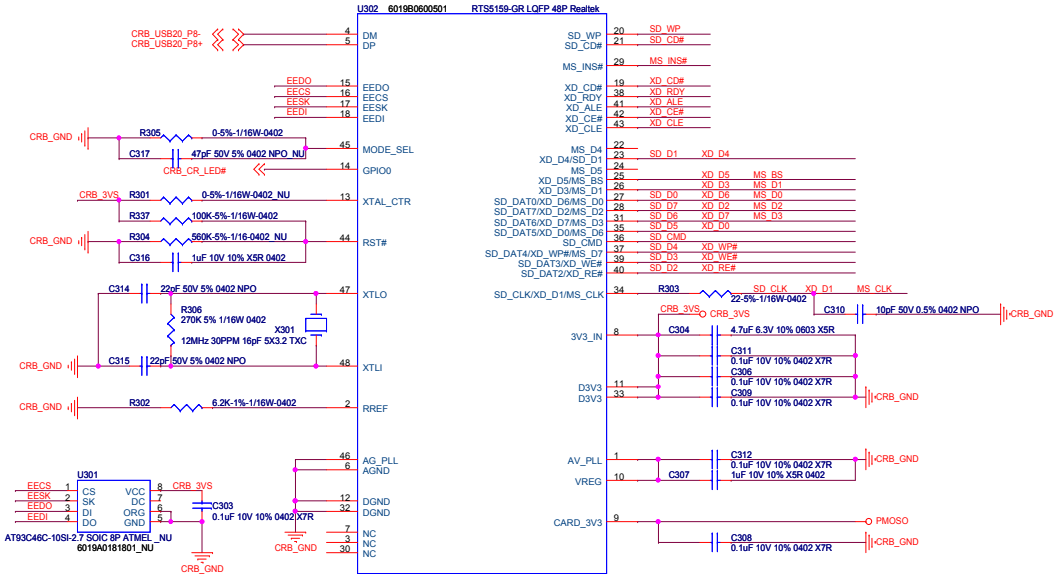

已反過PIN

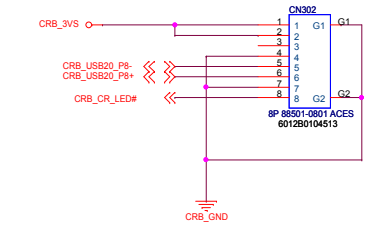

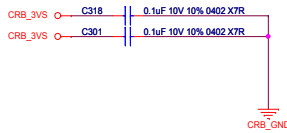

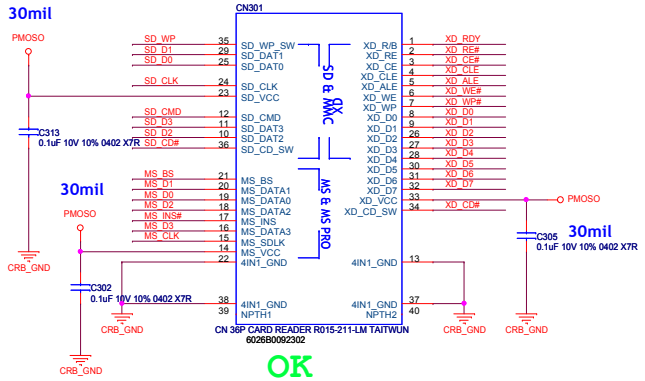

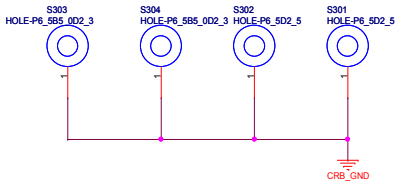

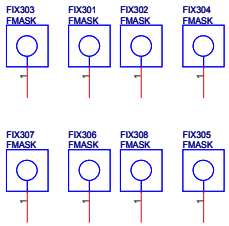

INVENTEC			
TITLE: SJM31 Cardreader Board CR_RTS5159E			
SIZE: C	CODE: AX1	DOC NUMBER: D-CS-1310A2270301-ALG	REV: AX1
		SHEET 9 of 15	

CHANGE by: Miles Liu | DATE: Tuesday, April 28, 2009

ACER_SJM31

GlidePad BOARD

2009.5.4

Monday, May 04, 2009		B
DATE	CHANGE NO.	REV

	EE	DATE	POWER	DATE
DRAWER				
DESIGN				
CHECK				
RESPONSIBLE				

SIZE= VER:

FILE NAME: XXXX-XXXXXX-XX

P/N XXXXXXXXXXX

INVENTEC

TITLE ACER_SJM31_GP Board

SIZE	CODE	DOC NUMBER	REV
C	CS	D-CS-1310A22f5801-ALG	B

SHEET 10 of 15

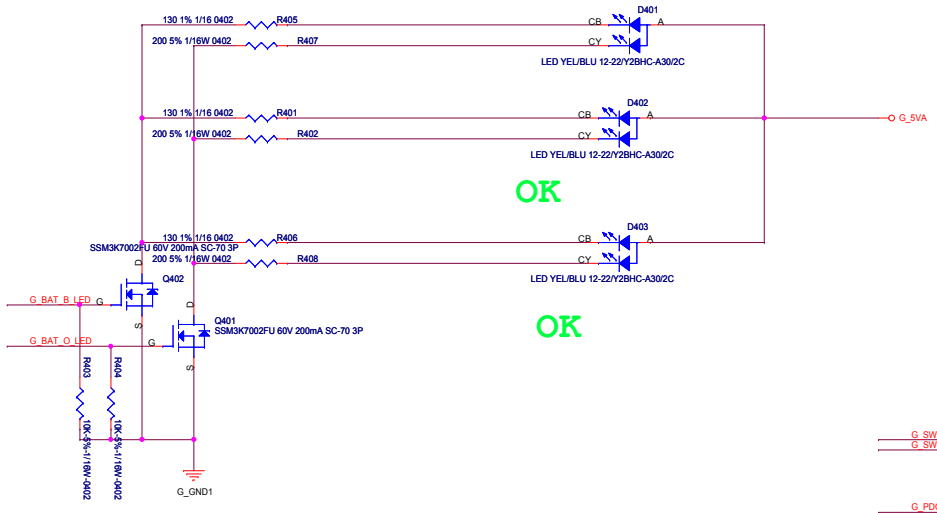

TO GP

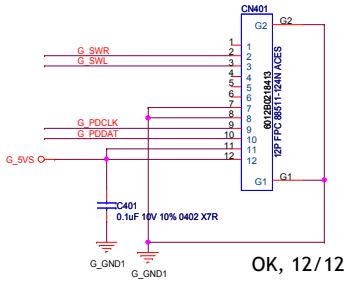

OK, 12/12

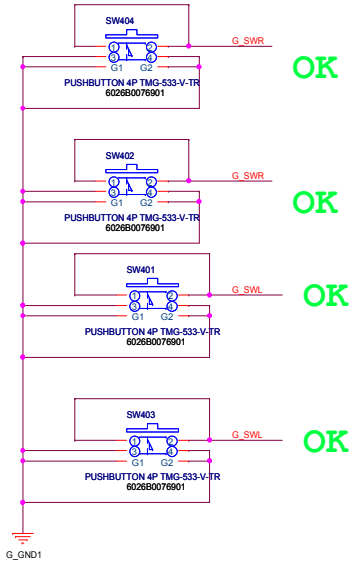

TO MB

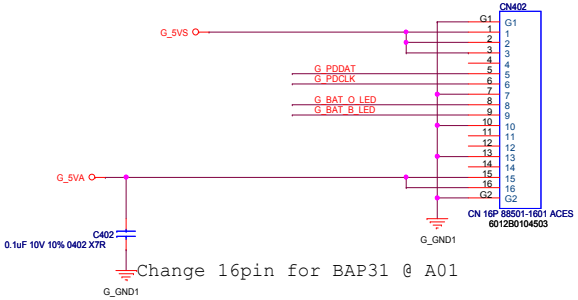

Change 16pin for BAP31 @ A01

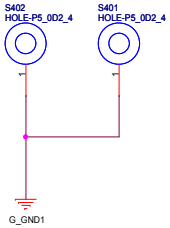

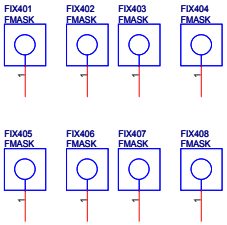

CHANGE by	Miles Liu	DATE	Monday, May 04, 2009

INVENTEC

TITLE: SJM31 GP Button Board
GP Button

SIZE	CODE	DOC NUMBER	REV
C	AX1	D-CS-1310A2275801-ALG	AX1

SHEET 11 of 15

ACER_SJM31

SSD BOARD

2009.5.4

Monday, May 04, 2009		B
DATE	CHANGE NO.	REV

	EE	DATE	POWER	DATE
DRAWER				
DESIGN				
CHECK				
RESPONSIBLE				

SIZE= VER:

FILE NAME: XXXX-XXXXXX-XX

P/N XXXXXXXXXXX

INVENTEC

TITLE ACER_SJM31_SSD Board

SIZE	CODE	DOC.NUMBER	REV
C	CS	D-CS-1310A2271101-ALG	B

SHEET 12 of 15

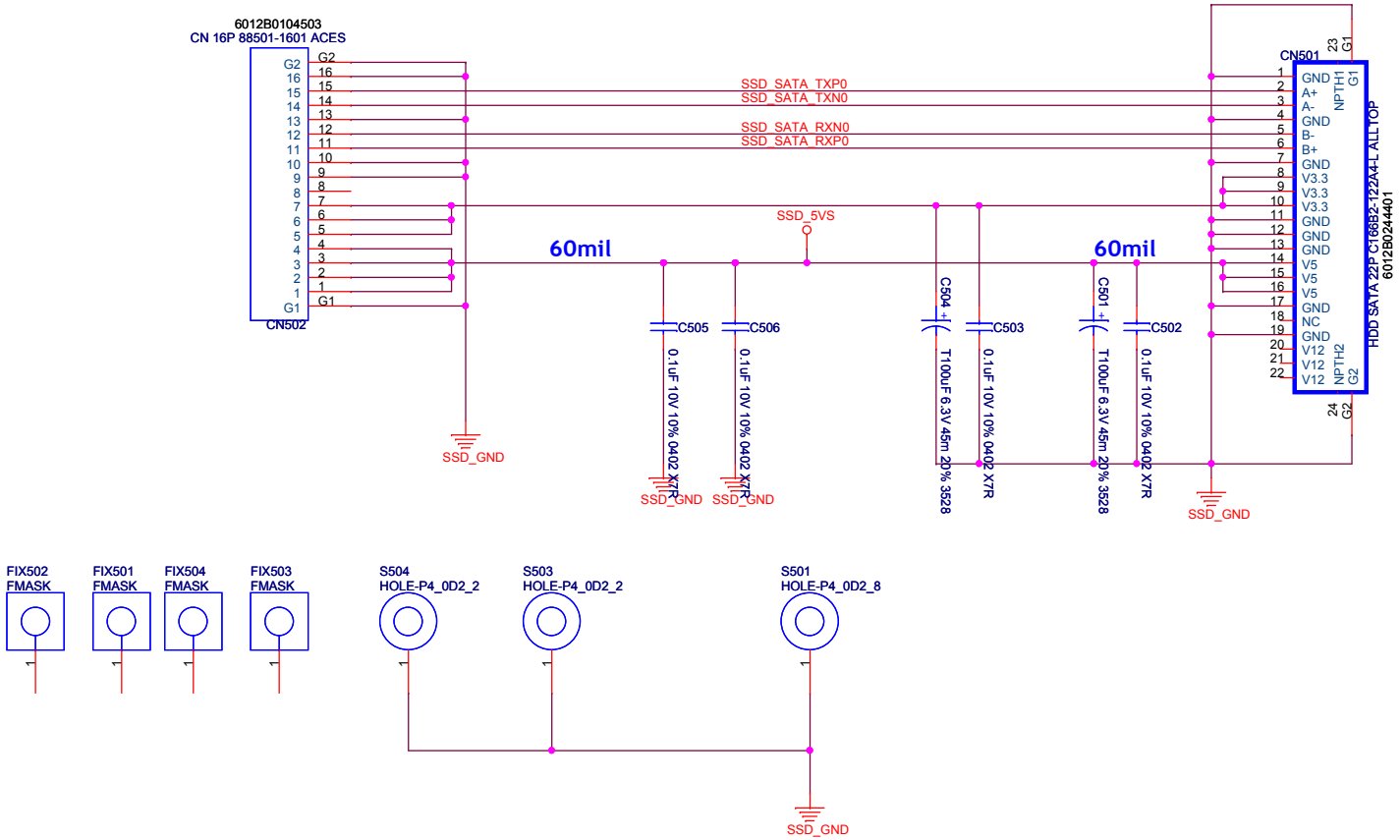

INVENTEC

TITLE

SJM31 SSD Board

SSD connector

SIZE	CODE	DOC.NUMBER	REV
B	AX1	D-CS-1310A2271101-ALG	AX1

CHANGE by	Miiles Liu	DATE	Tuesday, April 28, 2009	SHEET	13 of 15

ACER_SJM31

CapSense BOARD

2009.5.4

DATE	CHANGE NO.	REV
Monday, May 04, 2009		B

	EE	DATE	POWER	DATE
DRAWER				
DESIGN				
CHECK				
RESPONSIBLE				

SIZE= VER:

FILE NAME: XXXX-XXXXXX-XX

P/N XXXXXXXXXXXX

INVENTEC

TITLE ACER_SJM31_CapSense Board

SIZE	CODE	DOC NUMBER	REV
C	CS	D-CS-1310A2270901-ALG	B

SHEET 14 of 15

MMB BOARD

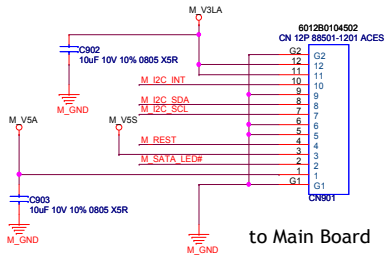

已反過PIN

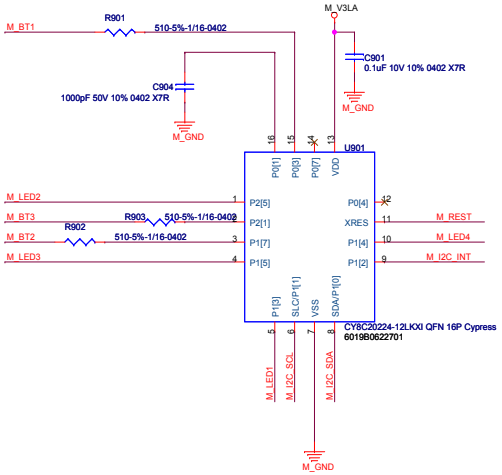

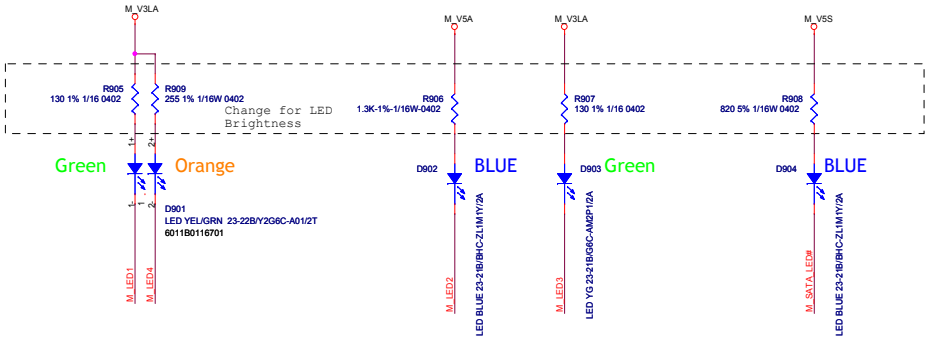

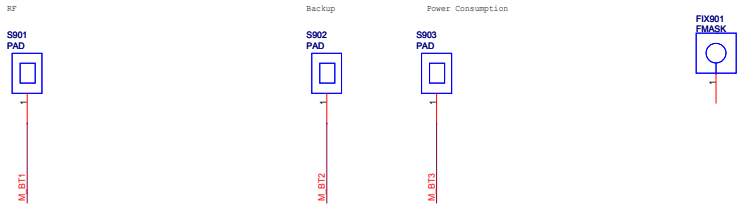

CHANGE by	Miles Liu	DATE	Tuesday, April 28, 2009

INVENTEC

TITLE: JM31 SW sensor Board
SW sensor

SIZE	CODE	DOC.NUMBER	REV
Custom	CS	D-CS-1310A22709-0-ALG	A

SHEET 15 of 15